SEGA MASTER SYSTEM 2
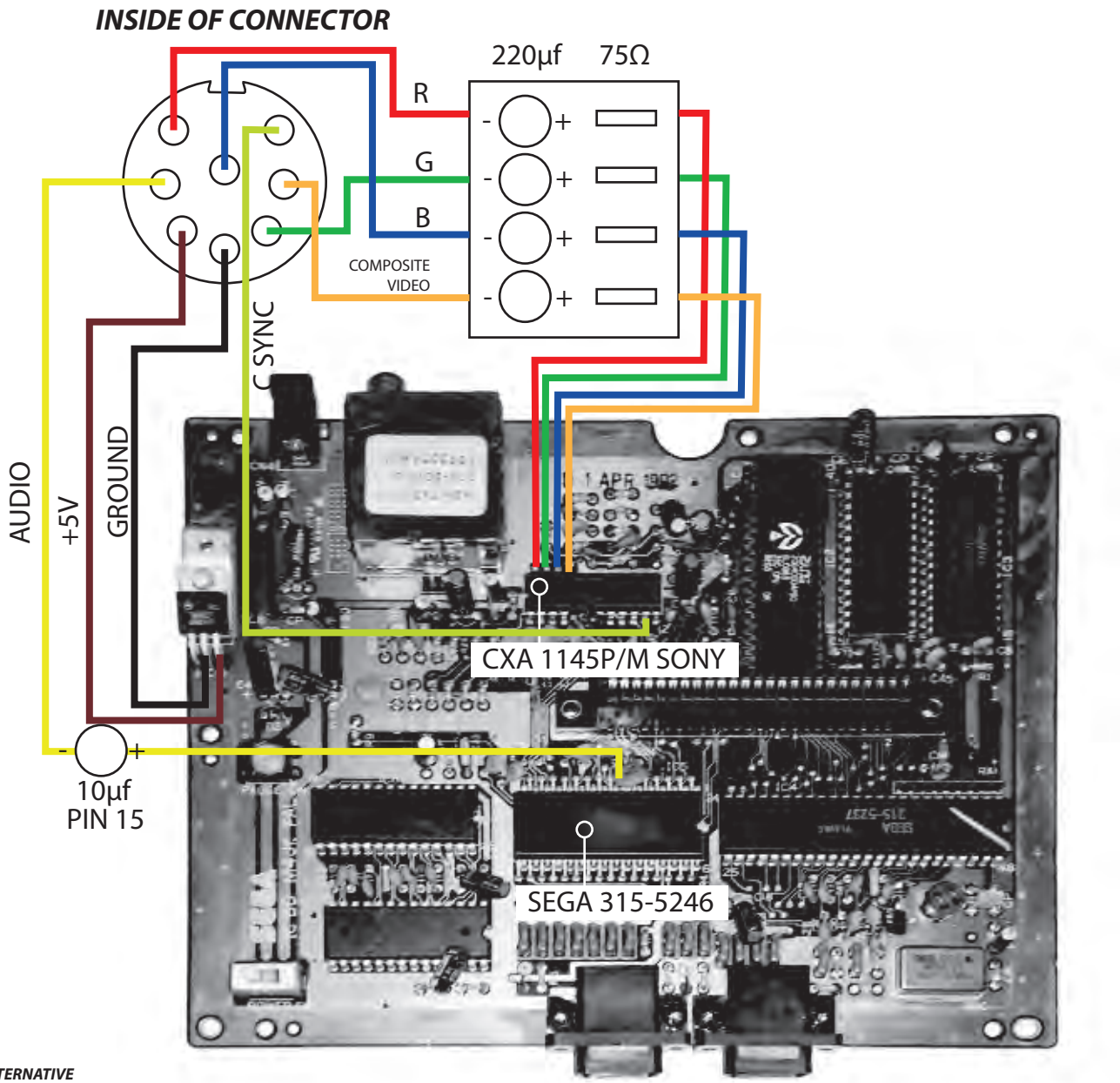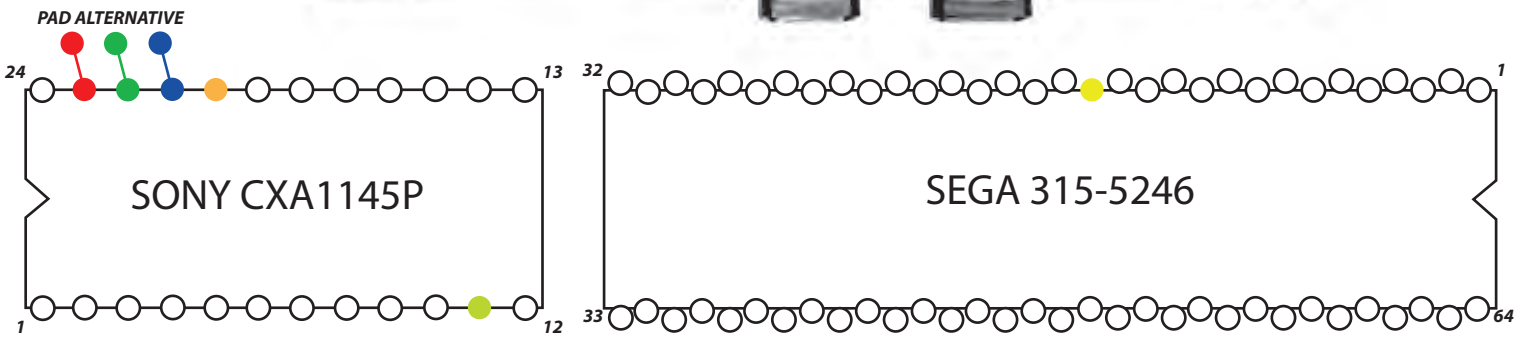
RGB MOD WITH SEGA MASTER SYSTEM 1 / MEGA DRIVE CONNECTOR